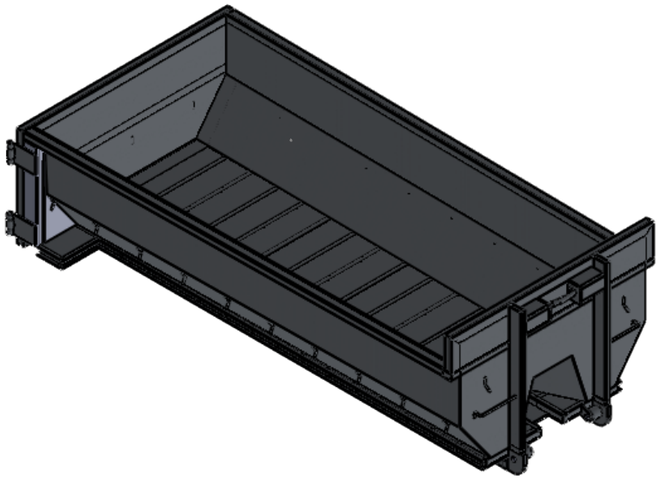

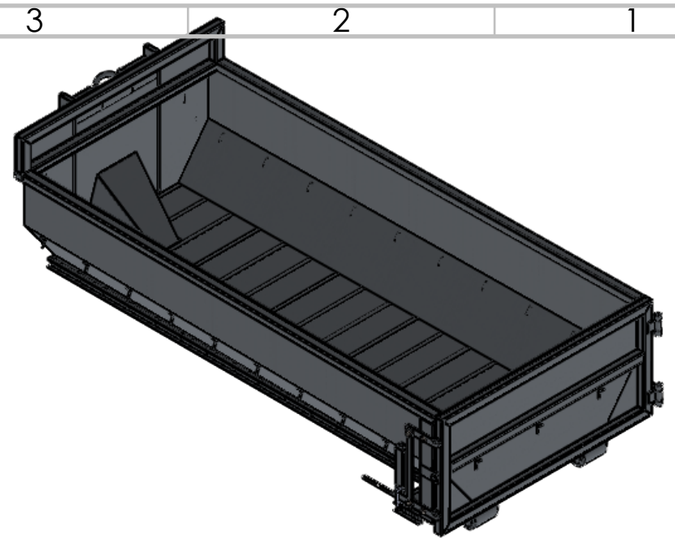

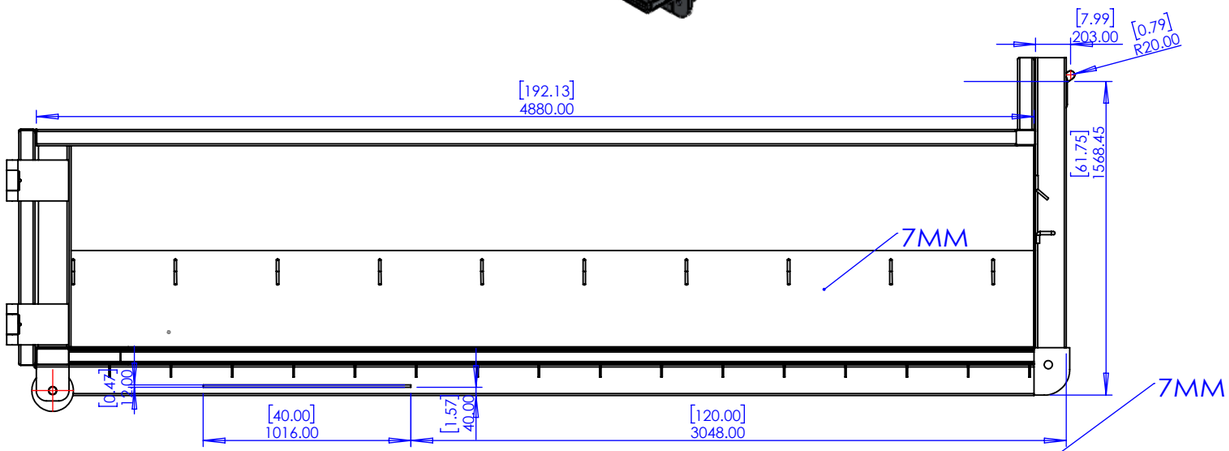

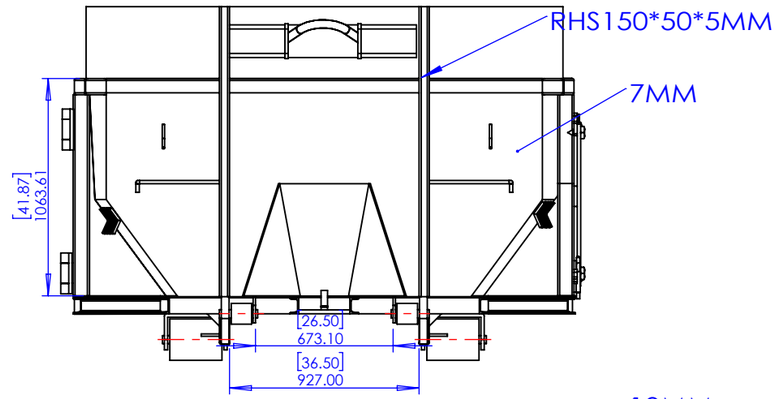

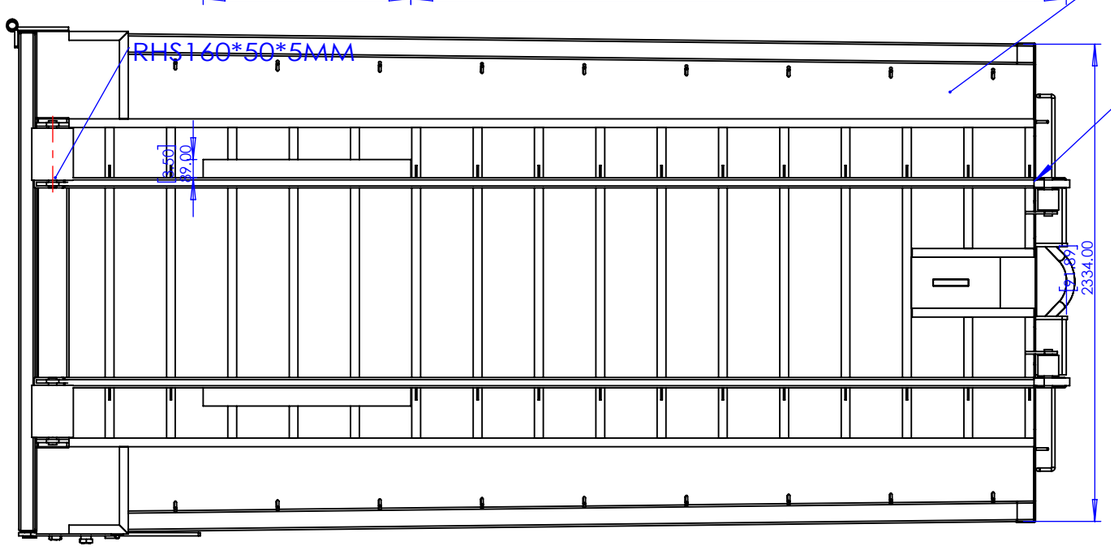

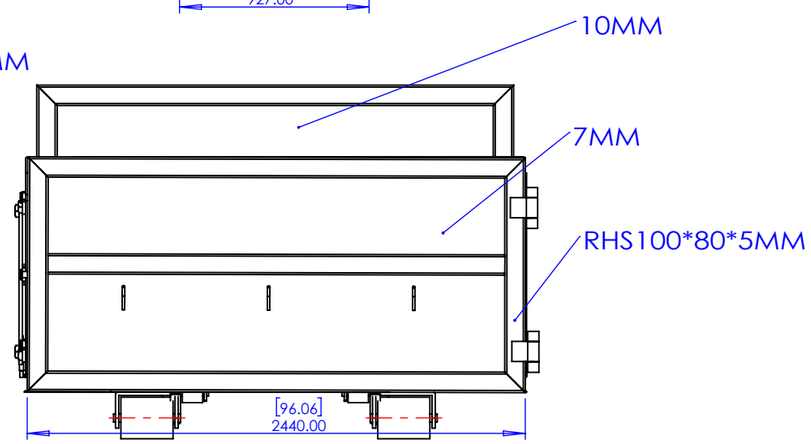

confidential property of HWM
This drawing and all of the information contained herein is the sole property of Hiwaste MFG.And only to be viewed , copied,shared or the transmittedby authorized parties

DIMNSIONS ARE IN INCHES
TOLERANCES:
FRACTIONAL
ANGULAR: MACH BEND
TWO PLACE DECIMAL
THREE PLACE DECIMAL

HIWASTE, MFG

REVISED

160G Ahui St.
Honolulu,HI 96813

	NAME	SIGNATURE	DATE
DRAWN	YD		Sep.28TH.,2025
CHECKED BY			
ENG APPR			
MFG APPR			
QA			

MATERIALS

Q235

TITLE

Nestable Dumpster

16'*8'* 3'6"

CONTACT WAY
160G Ahui St.
Honolulu,HI 96813
(808)478-2613
info@hiwastemfg.com
www.hiwastemfg.com

A3

SCALE:

DRAWING PAGE:1